American Insert Flange

Insert Flanges for Standard Piping
(Single Pipe)

ANSI B16.5 Conforming (ASME RATED)

p.16	***S-150 Series***	150#	Slip-On
p.17	***G-150 Series***	150#	Grooved (Roll-On)
p.18	***W-150 Series***	150#	Socket-Weld
p.19	***R-150 Series***	150#	Reducing
p.20	***S-300 Series***	300#	Slip-On
p.21	***G-300 Series***	300#	Grooved (Roll-On)
p.22	***W-300 Series***	300#	Socket-Weld

Standard Flange Thickness (CONVENTIONAL)

p.23	***SC-150 Series***	150#	Slip-On
p.24	***GC-150 Series***	150#	Grooved (Roll-On)
p.25	***WC-150 Series***	150#	Socket-Weld
p.26	***RC-150 Series***	150#	Reducing
p.27	***SC-300 Series***	300#	Slip-On
p.28	***GC-300 Series***	300#	Grooved (Roll-On)
p.29	***WC-300 Series***	300#	Socket-Weld

Copyright © 2016 American Insert Flange Co., Inc. All Rights Reserved. • Phone: (302) 777-7464 • Fax: (302) 777-7465
1603 Jessup Street, Suite 6, Wilmington, DE 19802 • Email: sales@AmericanInsertFlange.com
Web Site: www.AmericanInsertFlange.com

American Insert Flange

CLASS 150#

ANSI B16.5 Conforming • Single Pipe Dimensional Data

SERIES# S-150 (ASME)

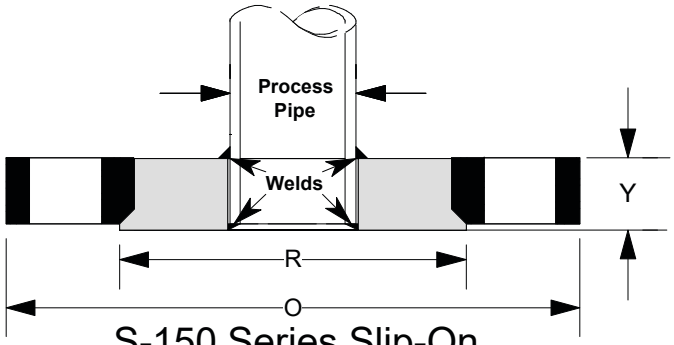

S-150 Series Slip-On

Part Number *see note 6.	Nominal Pipe Size	O (Outside Diameter)	R (Raised Face)	B (Inside Diameter)	Y (Overall Length)	# of Holes - Diameter	Bolt Circle Dia.	Estimated Weight (in lbs.)
S-150/.5	**1/2"**	3.50	1.38	0.88	0.69	4 - 0.63	2.38	0.75
S-150/.75	**3/4"**	3.88	1.69	1.09	0.63	4 - 0.63	2.75	1.00
S-150/1	**1"**	4.25	2.00	1.36	0.69	4 - 0.63	3.13	2.00
S-150/1.25	**1-1/4"**	4.63	2.50	1.70	0.69	4 - 0.63	3.50	2.25
S-150/1.5	**1-1/2"**	5.00	2.88	1.95	0.69	4 - 0.63	3.88	3.50
S-150/2	**2"**	6.00	3.63	2.44	0.75	4 - 0.75	4.75	5.00
S-150/2.5	**2-1/2"**	7.00	4.13	2.94	0.88	4 - 0.75	5.50	6.75
S-150/3	**3"**	7.50	5.00	3.57	0.94	4 - 0.75	6.00	8.75
S-150/3.5	**3-1/2"**	8.50	5.50	4.07	1.00	8 - 0.75	7.00	10.00
S-150/4	**4"**	9.00	6.19	4.57	1.06	8 - 0.75	7.50	23.00
S-150/5	**5"**	10.00	7.31	5.66	1.19	8 - 0.88	8.50	28.00
S-150/6	**6"**	11.00	8.50	6.72	1.19	8 - 0.88	9.50	38.00
S-150/8	**8"**	13.50	10.63	8.72	1.19	8 - 0.88	11.75	56.00
S-150/10	**10"**	16.00	12.75	10.88	1.69	12 - 1.00	14.25	78.00
S-150/12	**12"**	19.00	15.00	12.88	1.88	12 - 1.00	17.00	125.00
S-150/14	**14"**	21.00	16.25	14.14	2.13	12 - 1.13	18.75	165.00
S-150/16	**16"**	23.50	18.50	16.16	2.44	16 - 1.13	21.25	195.00
S-150/18	**18"**	25.00	21.00	18.18	2.50	16 - 1.25	22.75	215.00
S-150/20	**20"**	27.50	23.00	20.20	2.75	20 - 1.25	25.00	260.00
S-150/22	**22"**	29.50	25.25	22.22	3.15	20 - 1.38	27.25	320.00
S-150/24	**24"**	32.00	27.25	24.25	3.25	20 - 1.38	29.50	370.00

1. All dimensions in inches. The **Y dimension includes the 1/16" raised face.**
2. Tolerances and ratings are standard and conforming to ANSI B 16.5
3. Bolting is to SA-193 B7 and the gasket is spiral wound.
4. These flanges are engineered to conform to all flange pressure temperature ratings for the associated weight class. Due to the fact that an insert flange is a two-piece flange, it is made to a slightly thicker dimension than standard flanges.
5. Sizes not shown are available upon request.
6. Complete part number would have a *"slash" "/"* then material of the insert (ex. **S-150/2/316L** this would be a 2" insert flange with a 316L insert and carbon steel flange. If the flange is 316L, the part # would be S-150/2/316L-316L etc.
7. These dimensions are based on using stainless steel for the insert and carbon steel for the flange. Any changes in these types of material may result in an increase to the dimension of the flange thickness.
8. An insert and flange is sold together as one unit.

Copyright © 2016 American Insert Flange Co., Inc. All Rights Reserved. • Phone: (302) 777-7464 • Fax: (302) 777-7465
1603 Jessup Street, Suite 6, Wilmington, DE 19802 • Email: sales@AmericanInsertFlange.com
Web Site: www.AmericanInsertFlange.com

American Insert Flange

CLASS 150#

ANSI B16.5 Conforming • Single Pipe Dimensional Data

SERIES# G-150 (ASME)

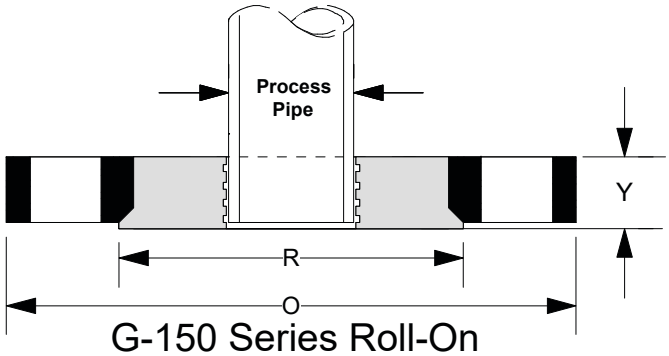

G-150 Series Roll-On

Part Number *see note 6.	Nominal Pipe Size	O (Outside Diameter)	R (Raised Face)	B (Inside Diameter)	Y (Overall Length)	# of Holes - Diameter	Bolt Circle Dia.	Estimated Weight (in lbs.)
G-150/.5	1/2"	3.50	1.38	0.85	0.69	4 - 0.63	2.38	0.75
G-150/.75	3/4"	3.88	1.69	1.06	0.63	4 - 0.63	2.75	1.00
G-150/1	1"	4.25	2.00	1.32	0.69	4 - 0.63	3.12	2.00
G-150/1.25	1-1/4"	4.63	2.50	1.67	0.69	4 - 0.63	3.50	2.25
G-150/1.5	1-1/2"	5.00	2.88	1.91	0.69	4 - 0.63	3.88	3.50
G-150/2	2"	6.00	3.63	2.38	0.75	4 - 0.75	4.75	5.00
G-150/2.5	2-1/2"	7.00	4.13	2.89	0.88	4 - 0.75	5.50	6.75
G-150/3	3"	7.50	5.00	3.52	0.94	4 - 0.75	6.00	8.75
G-150/3.5	3-1/2"	8.50	5.50	4.03	1.00	8 - 0.75	7.00	10.00
G-150/4	4"	9.00	6.19	4.52	1.06	8 - 0.75	7.50	23.00
G-150/5	5"	10.00	7.31	5.58	1.19	8 - 0.88	8.50	28.00
G-150/6	6"	11.00	8.50	6.66	1.19	8 - 0.88	9.50	38.00
G-150/8	8"	13.50	10.63	8.66	1.19	8 - 0.88	11.75	56.00
G-150/10	10"	16.00	12.75	10.79	1.69	12 - 1.00	14.25	78.00
G-150/12	12"	19.00	15.00	12.79	1.88	12 - 1.00	17.00	125.00
G-150/14	14"	21.00	16.25	14.06	2.13	12 - 1.13	18.75	165.00
G-150/16	16"	23.50	18.50	16.09	2.44	16 - 1.13	21.25	195.00
G-150/18	18"	25.00	21.00	18.10	2.50	16 - 1.25	22.75	230.00
G-150/20	20"	27.50	23.00	20.12	2.75	20 - 1.25	25.00	290.00
G-150/22	22"	29.50	25.25	22.14	3.15	20 - 1.38	27.25	375.00
G-150/24	24"	32.00	27.25	24.17	3.25	20 - 1.38	29.50	440.00

1. All dimensions in inches. The **Y dimension includes the 1/16" raised face.**
2. Tolerances and ratings are standard and conforming to ANSI B 16.5
3. Bolting is to SA-193 B7 and the gasket is spiral wound.
4. These flanges are engineered to conform to all flange pressure temperature ratings for the associated weight class. Due to the fact that an insert flange is a two-piece flange, it is made to a slightly thicker dimension than standard flanges.
5. Sizes not shown are available upon request.
6. Complete part number would have a *"slash" "/"* then material of the insert (ex. **G-150/2/316L** this would be a 2" insert flange with a 316L insert and carbon steel flange. If the flange is 316L, the part # would be G-150/2/316L-316L etc.
7. These dimensions are based on using stainless steel for the insert and carbon steel for the flange. Any changes in these types of material may result in an increase to the dimension of the flange thickness.
8. An insert and flange is sold together as one unit.

Copyright © 2016 American Insert Flange Co., Inc. All Rights Reserved. • Phone: (302) 777-7464 • Fax: (302) 777-7465
1603 Jessup Street, Suite 6, Wilmington, DE 19802 • Email: sales@AmericanInsertFlange.com
Web Site: www.AmericanInsertFlange.com

American Insert Flange

CLASS 150#

ANSI B16.5 Conforming • Single Pipe Dimensional Data

SERIES#W-150 (ASME)

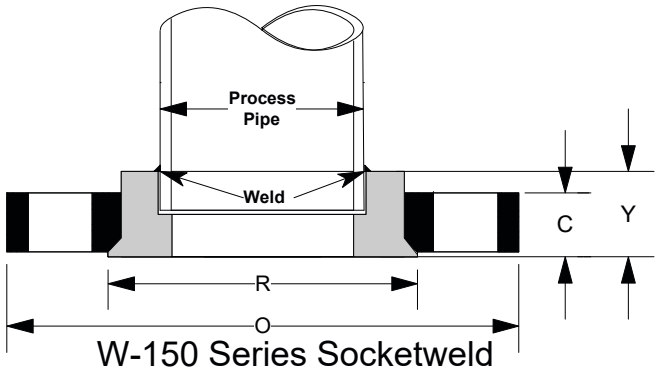

W-150 Series Socketweld

Part Number *see note 6.	Nominal Pipe Size	O (Outside Diameter)	R (Raised Face)	B (Inside Diameter)	C Flange Thickness	Y (Overall Length)	# of Holes - Diameter	Bolt Circle Dia.	Estimated Weight (in lbs.)
W-150/.5	**1/2"**	3.50	1.38	0.88	0.69	0.94	4 - 0.63	2.38	0.88
W-150/.75	**3/4"**	3.88	1.69	1.09	0.63	0.82	4 - 0.63	2.75	1.25
W-150/1	**1"**	4.25	2.00	1.36	0.69	0.88	4 - 0.63	3.12	2.25
W-150/1.25	**1-1/4"**	4.63	2.50	1.70	0.69	0.94	4 - 0.63	3.50	2.50
W-150/1.5	**1-1/2"**	5.00	2.88	1.95	0.69	0.94	4 - 0.63	3.88	4.00
W-150/2	**2"**	6.00	3.63	2.44	0.75	1.07	4 - 0.75	4.75	5.50
W-150/2.5	**2-1/2"**	7.00	4.13	2.94	0.88	1.19	4 - 0.75	5.50	7.00
W-150/3	**3"**	7.50	5.00	3.57	0.94	1.25	4 - 0.75	6.00	9.50
W-150/3.5	**3-1/2"**	8.50	5.50	4.07	1.00	1.38	8 - 0.75	7.00	10.75
W-150/4	**4"**	9.00	6.19	4.57	1.06	1.44	8 - 0.75	7.50	24.00
W-150/5	**5"**	10.00	7.31	5.66	1.19	1.62	8 - 0.88	8.50	29.00
W-150/6	**6"**	11.00	8.50	6.73	1.19	1.81	8 - 0.88	9.50	39.00
W-150/8	**8"**	13.50	10.63	8.73	1.19	1.87	8 - 0.88	11.75	58.00
W-150/10	**10"**	16.00	12.75	10.88	1.69	2.00	12 - 1.00	14.25	80.00
W-150/12	**12"**	19.00	15.00	12.88	1.88	2.68	12 - 1.00	17.00	130.00

Socket Weld insert flanges are generally only stocked up to 12" but custom larger sizes are available per special request. Please specify the pipe schedule you will be using with this flange.

1. All dimensions in inches. **The C and Y dimensions include the 1/16" raised face.**
2. Tolerances and ratings are standard and conforming to ANSI B 16.5
3. Bolting is to SA-193 B7 and the gasket is spiral wound.
4. These flanges are engineered to conform to all flange pressure temperature ratings for the associated weight class. Due to the fact that an insert flange is a two-piece flange, it is made to a slightly thicker dimension than standard flanges.
5. Sizes not shown are available upon request.
6. Complete part number would have a / then material of the insert, plus an added letter to denote the pipe schedule (sch. 40=G; sch 10=C; more schedules available upon request.) (ex. **W-150/2/316L-G** this would be a 2" socket-weld insert flange with a 316L insert and carbon steel flange for schedule 40 pipe.
7. These dimensions are based on using stainless steel for the insert and carbon steel for the flange. Any changes in these types of material may result in an increase to the dimension of the flange thickness.
8. An insert and flange is sold together as one unit.

Copyright © 2016 American Insert Flange Co., Inc. All Rights Reserved. • Phone: (302) 777-7464 • Fax: (302) 777-7465
1603 Jessup Street, Suite 6, Wilmington, DE 19802 • Email: sales@AmericanInsertFlange.com
Web Site: www.AmericanInsertFlange.com

American Insert Flange

CLASS 150#

ANSI B16.5 Conforming • Single Pipe Dimensional Data

SERIES#R-150 (ASME)

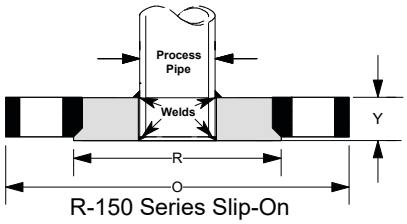

R-150 Series Slip-On

Part Number *see note 1.	Flange Size	Nominal Pipe Size	O (Outside Diameter)	R (Raised Face)	B (Inside Diam-eter)	Y (Overall Length)	# of Holes - Diameter	Bolt Circle Dia.	Estimated Weight (in lbs.)
R-150/.75X.5	3/4"	1/2"	3.88	1.69	0.88	0.63	4 - 0.63	2.75	1.00
R-150/1X.5	1"	1/2"	4.25	2.00	0.88	0.69	4 - 0.63	3.13	2.00
R-150/1X.75		3/4"	4.25	2.00	1.09	0.69	4 - 0.63	3.13	2.00
R-150/1.5X.5	1-1/2"	1/2"	5.00	3.00	0.88	0.69	4 - 0.63	3.88	3.50
R-150/1.5X.75		3/4"	5.00	3.00	1.09	0.69	4 - 0.63	3.88	3.50
R-150/1.5X1		1"	5.00	3.00	1.36	0.69	4 - 0.63	3.88	3.50
R-150/2X.5	2"	1/2"	6.00	3.63	0.88	0.75	4 - 0.75	4.75	5.00
R-150/2X.75		3/4"	6.00	3.63	1.09	0.75	4 - 0.75	4.75	5.00
R-150/2X1		1"	6.00	3.63	1.36	0.75	4 - 0.75	4.75	5.00
R-150/2X1.5		1-1/2"	6.00	3.63	1.95	0.75	4 - 0.75	4.75	5.00
R-150/2.5X.5	2-1/2"	1/2"	7.00	4.25	0.88	0.88	4 - 0.75	5.50	6.75
R-150/2.5X.75		3/4"	7.00	4.25	1.09	0.88	4 - 0.75	5.50	6.75
R-150/2.5X1		1"	7.00	4.25	1.36	0.88	4 - 0.75	5.50	6.75
R-150/2.5X1.5		1-1/2"	7.00	4.25	1.95	0.88	4 - 0.75	5.50	6.75
R-150/2.5X2		2"	7.00	4.25	2.44	0.88	4 - 0.75	5.50	6.75
R-150/3X.5	3"	1/2"	7.50	5.00	0.88	0.94	4 - 0.75	6.00	8.75
R-150/3X.75		3/4"	7.50	5.00	1.09	0.94	4 - 0.75	6.00	8.75
R-150/3X1		1"	7.50	5.00	1.36	0.94	4 - 0.75	6.00	8.75
R-150/3X1.5		1-1/2"	7.50	5.00	1.95	0.94	4 - 0.75	6.00	8.75
R-150/3X2		2"	7.50	5.00	2.44	0.94	4 - 0.75	6.00	8.75
R-150/3X2.5		2-1/2"	7.50	5.00	2.94	0.94	4 - 0.75	6.00	8.75
R-150/4X.5	4"	1/2"	9.00	6.19	0.88	1.06	8 - 0.75	7.50	10.00
R-150/4X.75		3/4"	9.00	6.19	1.09	1.06	8 - 0.75	7.50	10.00
R-150/4X1		1"	9.00	6.19	1.36	1.06	8 - 0.75	7.50	10.00
R-150/4X1.5		1-1/2"	9.00	6.19	1.95	1.06	8 - 0.75	7.50	10.00
R-150/4X2		2"	9.00	6.19	2.44	1.06	8 - 0.75	7.50	10.00
R-150/4X2.5		2-1/2"	9.00	6.19	2.94	1.06	8 - 0.75	7.50	10.00
R-150/4X3		3"	9.00	6.19	3.57	1.06	8 - 0.75	7.50	10.00
R-150/6X2	6"	2"	11.00	8.50	2.44	1.19	8 - 0.88	9.50	38.00
R-150/6X3		3"	11.00	8.50	3.57	1.19	8 - 0.88	9.50	38.00
R-150/6X4		4"	11.00	8.50	4.57	1.19	8 - 0.88	9.50	38.00
R-150/8X4	8"	4"	13.50	10.63	4.57	1.19	8 - 0.88	11.75	56.00
R-150/8X6		6"	13.50	10.63	6.72	1.19	8 - 0.88	11.75	56.00
R-150/10X6	10"	6"	16.00	12.75	6.72	1.69	12 - 1.00	14.25	65.00
R-150/10X8		8"	16.00	12.75	8.72	1.69	12 - 1.00	14.25	65.00
R-150/12X8	12"	8"	19.00	15.00	8.72	1.88	12 - 1.00	17.00	85.00
R-150/12X10		10"	19.00	15.00	10.88	1.88	12 - 1.00	17.00	85.00

1. Complete part number would have a / then material of the insert (ex. **R-150/2x1/316L** this would be a 2" x1" reducing insert flange with a 316L insert and carbon steel flange. * For other notes see the S-150 Series. All of these notes at the footer apply to this series but were omitted for space reasons.

Copyright © 2016 American Insert Flange Co., Inc. All Rights Reserved. • Phone: (302) 777-7464 • Fax: (302) 777-7465
1603 Jessup Street, Suite 6, Wilmington, DE 19802 • Web Site: www.AmericanInsertFlange.com

American Insert Flange

CLASS 300#

ANSI B16.5 Conforming • Single Pipe Dimensional Data

SERIES# S-300 (ASME)

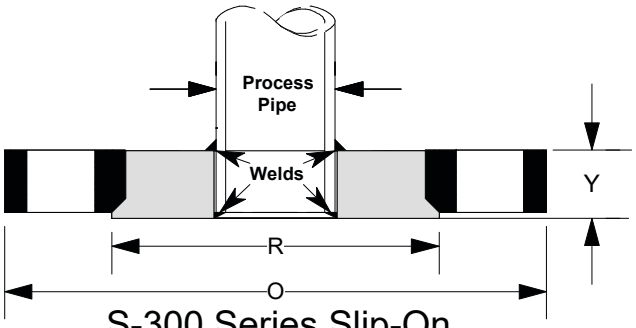

S-300 Series Slip-On

Part Number *see note 6.	Nominal Pipe Size	O (Outside Diameter)	R (Raised Face)	B (Inside Diameter)	Y (Overall Length)	# of Holes - Diameter	Bolt Circle Dia.	Estimated Weight (in lbs.)
S-300/.5	1/2"	3.75	1.38	0.88	0.75	4-0.63	2.63	1.00
S-300/.75	3/4"	4.63	1.69	1.09	0.88	4-0.75	3.25	1.50
S-300/1	1"	4.88	2.00	1.36	0.88	4-0.75	3.50	4.00
S-300/1.25	1-1/4"	5.25	2.50	1.70	1.00	4-0.75	3.88	6.00
S-300/1.5	1-1/2"	6.13	2.88	1.95	1.00	4-0.88	4.50	7.00
S-300/2	2"	6.50	3.63	2.44	1.13	8-0.75	5.00	13.00
S-300/2.5	2-1/2"	7.50	4.13	2.94	1.31	8-0.88	5.88	14.00
S-300/3	3"	8.25	5.00	3.57	1.38	8-0.88	6.63	16.00
S-300/3.5	3-1/2"	9.00	5.50	4.07	1.38	8-0.88	7.25	19.00
S-300/4	4"	10.00	6.19	4.57	1.38	8-0.88	7.88	22.00
S-300/5	5"	11.00	7.31	5.66	1.81	8-0.88	9.25	33.00
S-300/6	6"	12.50	8.50	6.72	1.81	12-0.88	10.63	47.00
S-300/8	8"	15.00	10.63	8.72	2.13	12-1.00	13.00	68.00
S-300/10	10"	17.50	12.75	10.88	2.56	16-1.13	15.25	95.00
S-300/12	12"	20.50	15.00	12.88	2.88	16-1.25	17.75	122.00
S-300/14	14"	23.00	16.25	14.14	3.50	20-1.25	20.25	271.00
S-300/16	16"	25.50	18.50	16.16	3.81	20-1.38	22.50	375.00
S-300/18	18"	28.00	21.00	18.18	4.06	24-1.38	24.75	450.00
S-300/20	20"	30.50	23.00	20.20	4.19	24-1.38	27.00	565.00
S-300/22	22"	33.00	25.25	22.22	5.06	24-1.63	29.25	752.00
S-300/24	24"	36.00	27.25	24.25	5.06	24-1.63	32.00	945.00

1. All dimensions in inches. The **Y dimension includes the 1/16" raised face.**
2. Tolerances and ratings are standard and conforming to ANSI B 16.5
3. Bolting is to SA-193 B7 and the gasket is spiral wound.
4. These flanges are engineered to conform to all flange pressure temperature ratings for the associated weight class. Due to the fact that an insert flange is a two-piece flange, it is made to a slightly thicker dimension than standard flanges.
5. Sizes not shown are available upon request.
6. Complete part number would have a *"slash" "/"* then material of the insert (ex. **S-300/2/316L** this would be a 2" insert flange with a 316L insert and carbon steel flange. If the flange is 316L, the part # would be S-300/2/316L-316L etc.
7. These dimensions are based on using stainless steel for the insert and carbon steel for the flange. Any changes in these types of material may result in an increase to the dimension of the flange thickness.
8. An insert and flange is sold together as one unit.

Copyright © 2016 American Insert Flange Co., Inc. All Rights Reserved. • Phone: (302) 777-7464 • Fax: (302) 777-7465
1603 Jessup Street, Suite 6, Wilmington, DE 19802 • Email: sales@AmericanInsertFlange.com
Web Site: www.AmericanInsertFlange.com

American Insert Flange

CLASS 300#

ANSI B16.5 Conforming • Single Pipe Dimensional Data

SERIES# G-300 (ASME)

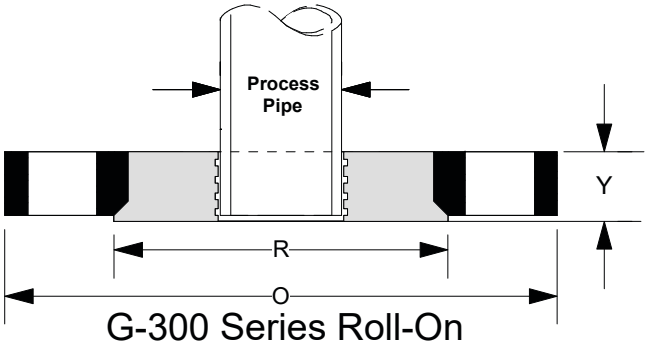

G-300 Series Roll-On

Part Number *see note 6.	Nominal Pipe Size	O (Outside Diameter)	R (Raised Face)	B (Inside Diameter)	Y (Overall Length)	# of Holes - Diameter	Bolt Circle Dia.	Estimated Weight (in lbs.)
G-300/.5	1/2"	3.75	1.38	0.85	0.75	4-0.63	2.63	1.00
G-300/.75	3/4"	4.63	1.69	1.06	0.88	4-0.75	3.25	1.50
G-300/1	1"	4.88	2.00	1.32	0.88	4-0.75	3.50	4.00
G-300/1.25	1-1/4"	5.25	2.50	1.67	1.00	4-0.75	3.88	6.00
G-300/1.5	1-1/2"	6.13	2.88	1.91	1.00	4-0.88	4.50	7.00
G-300/2	2"	6.50	3.63	2.38	1.13	8-0.75	5.00	13.00
G-300/2.5	2-1/2"	7.50	4.13	2.89	1.31	8-0.88	5.88	14.00
G-300/3	3"	8.25	5.00	3.52	1.38	8-0.88	6.63	16.00
G-300/3.5	3-1/2"	9.00	5.50	4.03	1.38	8-0.88	7.25	19.00
G-300/4	4"	10.00	6.19	4.52	1.38	8-0.88	7.88	22.00
G-300/5	5"	11.00	7.31	5.58	1.81	8-0.88	9.25	33.00
G-300/6	6"	12.50	8.50	6.66	1.81	12-0.88	10.63	47.00
G-300/8	8"	15.00	10.63	8.66	2.13	12-1.00	13.00	68.00
G-300/10	10"	17.50	12.75	10.79	2.56	16-1.13	15.25	95.00
G-300/12	12"	20.50	15.00	12.79	2.88	16-1.25	17.75	122.00
G-300/14	14"	23.00	16.25	14.06	3.50	20-1.25	20.25	271.00
G-300/16	16"	25.50	18.50	16.09	3.81	20-1.38	22.50	375.00
G-300/18	18"	28.00	21.00	18.10	4.06	24-1.38	24.75	450.00
G-300/20	20"	30.50	23.00	20.12	4.19	24-1.38	27.00	565.00
G-300/22	22"	33.00	25.25	22.14	5.06	24-1.63	29.25	752.00
G-300/24	24"	36.00	27.25	24.17	5.06	24-1.63	32.00	945.00

1. All dimensions in inches. The **Y dimension includes the 1/16" raised face.**
2. Tolerances and ratings are standard and conforming to ANSI B 16.5
3. Bolting is to SA-193 B7 and the gasket is spiral wound.
4. These flanges are engineered to conform to all flange pressure temperature ratings for the associated weight class. Due to the fact that an insert flange is a two-piece flange, it is made to a slightly thicker dimension than standard flanges.
5. Sizes not shown are available upon request.
6. Complete part number would have a *"slash" "/"* then material of the insert (ex. **G-300/2/316L** this would be a 2" insert flange with a 316L insert and carbon steel flange. If the flange is 316L, the part # would be G-300/2/316L-316L etc.
7. These dimensions are based on using stainless steel for the insert and carbon steel for the flange. Any changes in these types of material may result in an increase to the dimension of the flange thickness.
8. An insert and flange is sold together as one unit.

Copyright © 2016 American Insert Flange Co., Inc. All Rights Reserved. • Phone: (302) 777-7464 • Fax: (302) 777-7465
1603 Jessup Street, Suite 6, Wilmington, DE 19802 • Email: sales@AmericanInsertFlange.com
Web Site: www.AmericanInsertFlange.com

American Insert Flange

CLASS 300#

ANSI B16.5 Conforming • Single Pipe Dimensional Data

SERIES# W-300 (ASME)

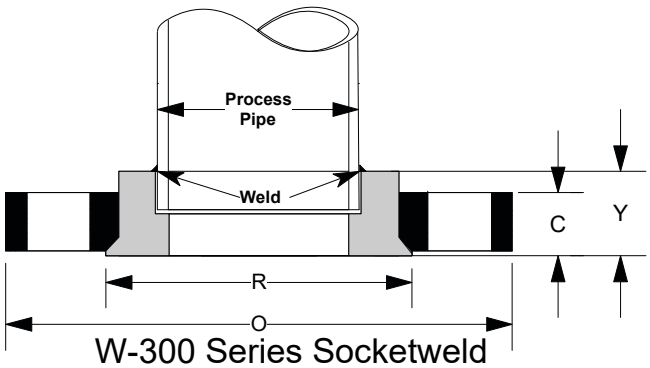

W-300 Series Socketweld

Part Number *see note 6.	Nominal Pipe Size	O (Outside Diameter)	R (Raised Face)	B (Inside Diameter)	C Flange Thickness	Y (Overall Length)	# of Holes - Diameter	Bolt Circle Dia.	Estimated Weight (in lbs.)
W-300/.5	**1/2"**	3.75	1.38	0.88	0.75	1.07	4-0.63	2.63	1.00
W-300/.75	**3/4"**	4.63	1.69	1.09	0.88	1.25	4-0.75	3.25	1.50
W-300/1	**1"**	4.88	2.00	1.36	0.88	1.25	4-0.75	3.50	4.00
W-300/1.25	**1-1/4"**	5.25	2.50	1.70	1.00	1.31	4-0.75	3.88	6.00
W-300/1.5	**1-1/2"**	6.13	2.88	1.95	1.00	1.38	4-0.88	4.50	7.00
W-300/2	**2"**	6.50	3.63	2.44	1.13	1.56	8-0.75	5.00	13.00
W-300/2.5	**2-1/2"**	7.50	4.13	2.94	1.31	1.81	8-0.88	5.88	14.00
W-300/3	**3"**	8.25	5.00	3.57	1.38	1.94	8-0.88	6.63	16.00

Socket Weld insert flanges are generally only stocked up to 3" in the 300# Class, but custom larger sizes are available per special request. Please specify the pipe schedule you will be using with this flange.

1. All dimensions in inches. **The C and Y dimensions include the 1/16" raised face.**
2. Tolerances and ratings are standard and conforming to ANSI B 16.5
3. Bolting is to SA-193 B7 and the gasket is spiral wound.
4. These flanges are engineered to conform to all flange pressure temperature ratings for the associated weight class. Due to the fact that an insert flange is a two-piece flange, it is made to a slightly thicker dimension than standard flanges.
5. Sizes not shown are available upon request.
6. Complete part number would have a / then material of the insert, plus an added letter to denote the pipe schedule (sch. 40=G; sch 10=C; more schedules available upon request.) (ex. **W-300/2/316L-G** this would be a 2" socket-weld insert flange with a 316L insert and carbon steel flange for schedule 40 pipe.
7. These dimensions are based on using stainless steel for the insert and carbon steel for the flange. Any changes in these types of material may result in an increase to the dimension of the flange thickness.
8. An insert and flange is sold together as one unit.

Copyright © 2016 American Insert Flange Co., Inc. All Rights Reserved. • Phone: (302) 777-7464 • Fax: (302) 777-7465
1603 Jessup Street, Suite 6, Wilmington, DE 19802 • Email: sales@AmericanInsertFlange.com
Web Site: www.AmericanInsertFlange.com

American Insert Flange

CLASS 150#

Standard Flange Thickness
Single Pipe • Slip-On Conventional (SC)
SERIES# SC-150 (CONVENTIONAL)

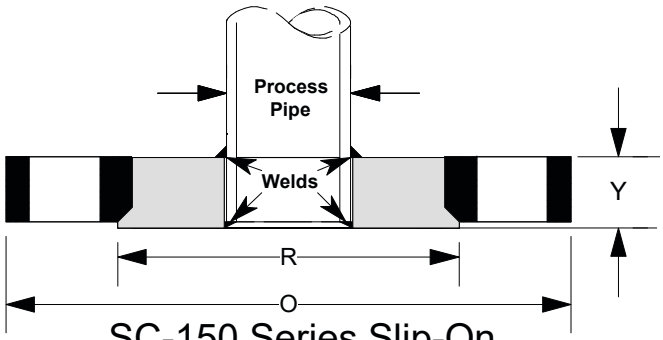

SC-150 Series Slip-On

Part Number *see note 6.	Nominal Pipe Size	O (Outside Diameter)	R (Raised Face)	B (Inside Diameter)	Y (Overall Length)	# of Holes - Diameter	Bolt Circle Dia.	Estimated Weight (in lbs.)
SC-150/.5	**1/2"**	3.50	1.38	0.88	0.44	4 - 0.63	2.38	0.75
SC-150/.75	**3/4"**	3.88	1.69	1.09	0.50	4 - 0.63	2.75	1.00
SC-150/1	**1"**	4.25	2.00	1.36	0.56	4 - 0.63	3.13	2.00
SC-150/1.25	**1-1/4"**	4.63	2.50	1.70	0.63	4 - 0.63	3.50	2.25
SC-150/1.5	**1-1/2"**	5.00	2.88	1.95	0.69	4 - 0.63	3.88	3.50
SC-150/2	**2"**	6.00	3.63	2.44	0.75	4 - 0.75	4.75	5.00
SC-150/2.5	**2-1/2"**	7.00	4.13	2.94	0.88	4 - 0.75	5.50	6.75
SC-150/3	**3"**	7.50	5.00	3.57	0.94	4 - 0.75	6.00	8.00
SC-150/3.5	**3-1/2"**	8.50	5.50	4.07	0.94	8 - 0.75	7.00	10.0
SC-150/4	**4"**	9.00	6.19	4.57	0.94	8 - 0.75	7.50	11.0
SC-150/5	**5"**	10.00	7.31	5.66	0.94	8 - 0.88	8.50	12.5
SC-150/6	**6"**	11.00	8.50	6.72	1.00	8 - 0.88	9.50	15.0
SC-150/8	**8"**	13.50	10.63	8.72	1.13	8 - 0.88	11.75	23.0
SC-150/10	**10"**	16.00	12.75	10.88	1.19	12 - 1.00	14.25	30.5
SC-150/12	**12"**	19.00	15.00	12.88	1.25	12 - 1.00	17.00	51.5
SC-150/14	**14"**	21.00	16.25	14.14	1.38	12 - 1.13	18.75	74.5
SC-150/16	**16"**	23.50	18.50	16.16	1.44	16 - 1.13	21.25	89.0
SC-150/18	**18"**	25.00	21.00	18.18	1.56	16 - 1.25	22.75	114.0
SC-150/20	**20"**	27.50	23.00	20.20	1.69	20 - 1.25	25.00	146.0
SC-150/22	**22"**	29.50	25.25	22.22	1.81	20 - 1.38	27.25	185.0
SC-150/24	**24"**	32.00	27.25	24.25	1.88	20 - 1.38	29.50	201.0

1. All dimensions in inches. The **Y dimension includes the 1/16" raised face.**
2. Tolerances are standard to ANSI B 16.5 dimensional tolerances.
3. Bolting is to SA-193 B7 and the gasket is spiral wound.
4. These flanges are made to **standard ASME flange thicknesses**. Although the conventional series (standard flange thicknesses) have been used the longest in the PVF industry, not all pressure temperature ratings will conform with ASME B16.5 due to an insert flange being a two-piece flange. (ASME B16.5 is written for one-piece flanges) Please see our ASME Series for engineered thicknesses that meet and conform to all pressure temperature ratings for ASME Code.
5. Sizes not shown are available upon request.
6. Complete part number would have a / then material of the insert (ex. **SC-150/2/316L** this would be a 2" insert flange with a 316L insert and carbon steel flange. If the flange is 316L, the part # is SC-150/2/316L-316L etc.
7. These dimensions are based on using stainless steel for the insert and carbon steel for the flange. Any changes in these types of material may result in an increase to the dimension of the flange thickness.
8. An insert and flange is sold together as one unit.

Copyright © 2016 American Insert Flange Co., Inc. All Rights Reserved. • Phone: (302) 777-7464 • Fax: (302) 777-7465
1603 Jessup Street, Suite 6, Wilmington, DE 19802 • Email: sales@AmericanInsertFlange.com
Web Site: www.AmericanInsertFlange.com

American Insert Flange

CLASS 150#

Standard Flange Thickness

Single Pipe • Grooved Conventional (GC)

SERIES# GC-150 (CONVENTIONAL)

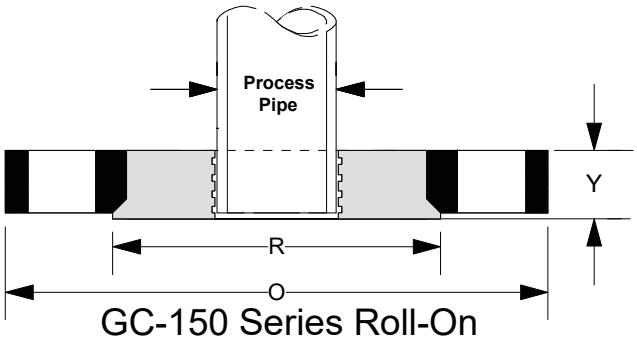

GC-150 Series Roll-On

Part Number *see note 6.	Nominal Pipe Size	O (Outside Diameter)	R (Raised Face)	B (Inside Diameter)	Y (Overall Length)	# of Holes - Diameter	Bolt Circle Dia.	Estimated Weight (in lbs.)
GC-150/.5	**1/2"**	3.50	1.38	0.85	0.44	4 - 0.63	2.38	0.75
GC-150/.75	**3/4"**	3.88	1.69	1.06	0.50	4 - 0.63	2.75	1.00
GC-150/1	**1"**	4.25	2.00	1.32	0.56	4 - 0.63	3.12	2.00
GC-150/1.25	**1-1/4"**	4.63	2.50	1.67	0.63	4 - 0.63	3.50	2.25
GC-150/1.5	**1-1/2"**	5.00	2.88	1.91	0.69	4 - 0.63	3.88	3.50
GC-150/2	**2"**	6.00	3.63	2.38	0.75	4 - 0.75	4.75	5.00
GC-150/2.5	**2-1/2"**	7.00	4.13	2.89	0.88	4 - 0.75	5.50	6.75
GC-150/3	**3"**	7.50	5.00	3.52	0.94	4 - 0.75	6.00	8.00
GC-150/3.5	**3-1/2"**	8.50	5.50	4.03	0.94	8 - 0.75	7.00	10.0
GC-150/4	**4"**	9.00	6.19	4.52	0.94	8 - 0.75	7.50	11.0
GC-150/5	**5"**	10.00	7.31	5.58	0.94	8 - 0.88	8.50	12.5
GC-150/6	**6"**	11.00	8.50	6.66	1.00	8 - 0.88	9.50	15.0
GC-150/8	**8"**	13.50	10.63	8.66	1.13	8 - 0.88	11.75	23.0
GC-150/10	**10"**	16.00	12.75	10.79	1.19	12 - 1.00	14.25	30.5
GC-150/12	**12"**	19.00	15.00	12.79	1.25	12 - 1.00	17.00	51.5
GC-150/14	**14"**	21.00	16.25	14.06	1.38	12 - 1.13	18.75	74.5
GC-150/16	**16"**	23.50	18.50	16.09	1.44	16 - 1.13	21.25	89.0
GC-150/18	**18"**	25.00	21.00	18.10	1.56	16 - 1.25	22.75	114.0
GC-150/20	**20"**	27.50	23.00	20.12	1.69	20 - 1.25	25.00	146.0
GC-150/22	**22"**	29.50	25.25	22.14	1.81	20 - 1.38	27.25	185.0
GC-150/24	**24"**	32.00	27.25	24.17	1.88	20 - 1.38	29.50	201.0

1. All dimensions in inches. The **Y dimension includes the 1/16" raised face.**
2. Tolerances are standard to ANSI B 16.5 dimensional tolerances.
3. Bolting is to SA-193 B7 and the gasket is spiral wound.
4. These flanges are made to **standard ASME flange thicknesses**. Although the conventional series (standard flange thicknesses) have been used the longest in the PVF industry, not all pressure temperature ratings will conform with ASME B16.5 due to an insert flange being a two-piece flange. (ASME B16.5 is written for one-piece flanges) Please see our ASME Series for engineered thicknesses that meet and conform to all pressure temperature ratings for ASME Code.
5. Sizes not shown are available upon request.
6. Complete part number would have a / then material of the insert (ex. **GC-150/2/316L** this would be a 2" insert flange with a 316L insert and carbon steel flange. If the flange is 316L, the part # is GC-150/2/316L-316L etc.
7. These dimensions are based on using stainless steel for the insert and carbon steel for the flange. Any changes in these types of material may result in an increase to the dimension of the flange thickness.
8. An insert and flange is sold together as one unit.

Copyright © 2016 American Insert Flange Co., Inc. All Rights Reserved. • Phone: (302) 777-7464 • Fax: (302) 777-7465
1603 Jessup Street, Suite 6, Wilmington, DE 19802 • Email: sales@AmericanInsertFlange.com
Web Site: www.AmericanInsertFlange.com

American Insert Flange

CLASS 150#

Standard Flange Thickness

Single • Socket-Weld Conventional (WC)

SERIES# WC-150 (CONVENTIONAL)

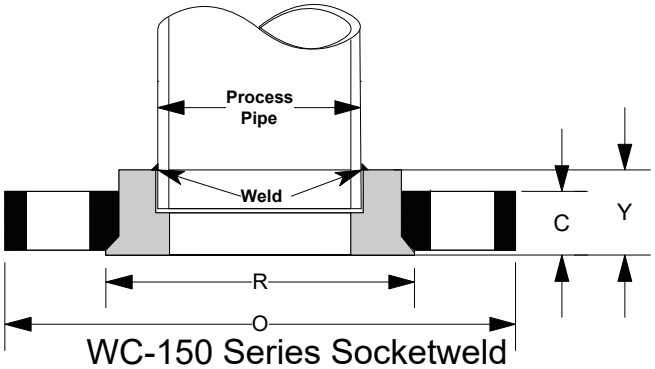

WC-150 Series Socketweld

Part Number *see note 6.	Nominal Pipe Size	O (Outside Diameter)	R (Raised Face)	B (Inside Diameter)	C Flange Thickness	Y (Overall Length)	# of Holes - Diameter	Bolt Circle Dia.	Estimated Weight (in lbs.)
WC-150/.5	**1/2"**	3.50	1.38	0.88	0.44	0.63	4 - 0.63	2.38	0.88
WC-150/.75	**3/4"**	3.88	1.69	1.09	0.50	0.63	4 - 0.63	2.75	1.25
WC-150/1	**1"**	4.25	2.00	1.36	0.56	0.69	4 - 0.63	3.12	2.25
WC-150/1.25	**1-1/4"**	4.63	2.50	1.70	0.63	0.81	4 - 0.63	3.50	2.50
WC-150/1.5	**1-1/2"**	5.00	2.88	1.95	0.69	0.88	4 - 0.63	3.88	4.00
WC-150/2	**2"**	6.00	3.63	2.44	0.75	1.00	4 - 0.75	4.75	5.50
WC-150/2.5	**2-1/2"**	7.00	4.13	2.94	0.88	1.13	4 - 0.75	5.50	7.00
WC-150/3	**3"**	7.50	5.00	3.57	0.94	1.19	4 - 0.75	6.00	8.00
WC-150/3.5	**3-1/2"**	8.50	5.50	4.07	0.94	1.25	8 - 0.75	7.00	10.0
WC-150/4	**4"**	9.00	6.19	4.57	0.94	1.31	8 - 0.75	7.50	11.0
WC-150/5	**5"**	10.00	7.31	5.66	0.94	1.44	8 - 0.88	8.50	12.5
WC-150/6	**6"**	11.00	8.50	6.73	1.00	1.56	8 - 0.88	9.50	15.0
WC-150/8	**8"**	13.50	10.63	8.73	1.13	1.75	8 - 0.88	11.75	23.0
WC-150/10	**10"**	16.00	12.75	10.88	1.19	1.94	12 - 1.00	14.25	30.5
WC-150/12	**12"**	19.00	15.00	12.88	1.25	2.19	12 - 1.00	17.00	51.5

Socket Weld insert flanges are generally only stocked up to 12" but custom larger sizes are available per special request. Please specify the pipe schedule you will be using with this flange.

1. All dimensions in inches. **The C and Y dimensions include the 1/16" raised face.**
2. Tolerances are standard to ANSI B 16.5 dimensional tolerances.
3. Bolting is to SA-193 B7 and the gasket is spiral wound.
4. These flanges are made to **standard ASME flange thicknesses**. Although the conventional series (standard flange thicknesses) have been used the longest in the PVF industry, not all pressure temperature ratings will conform with ASME B16.5 due to an insert flange being a two-piece flange. (ASME B16.5 is written for one-piece flanges) Please see our ASME Series for engineered thicknesses that meet and conform to all pressure temperature ratings for ASME Code.
5. Sizes not shown are available upon request.
6. Complete part number would have a / then material of the insert, plus an added letter to denote the pipe schedule (sch. 40=G; sch 10=C; more schedules available upon request.) (ex. **WC-150/2/316L-G** this would be a 2" socket-weld insert flange with a 316L insert and carbon steel flange for schedule 40 pipe.
7. These dimensions are based on using stainless steel for the insert and carbon steel for the flange. Any changes in these types of material may result in an increase to the dimension of the flange thickness.
8. An insert and flange is sold together as one unit.

Copyright © 2016 American Insert Flange Co., Inc. All Rights Reserved. • Phone: (302) 777-7464 • Fax: (302) 777-7465
1603 Jessup Street, Suite 6, Wilmington, DE 19802 • Email: sales@AmericanInsertFlange.com
Web Site: www.AmericanInsertFlange.com

American Insert Flange

CLASS 150#

Standard Flange Thickness
Reducing Slip-On Conventional (RC)
SERIES#RC-150 (CONVENTIONAL)

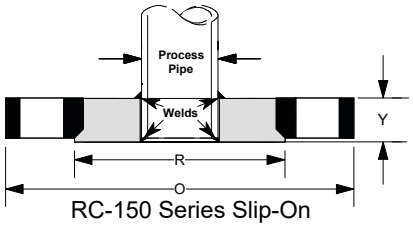

RC-150 Series Slip-On

Part Number *see note 1.	Flange Size	Nominal Pipe Size	O (Outside Diameter)	R (Raised Face)	B (Inside Diameter)	Y (Overall Length)	# of Holes - Diameter	Bolt Circle Dia.	Estimated Weight (in lbs.)
RC-150/.75X.5	3/4"	1/2"	3.88	1.69	0.88	0.50	4 - 0.63	2.75	2.5
RC-150/1X.5	1"	1/2"	4.25	2.00	0.88	0.56	4 - 0.63	3.13	3.0
RC-150/1X.75		3/4"	4.25	2.00	1.09	0.56	4 - 0.63	3.13	3.0
RC-150/1.5X.5	1-1/2"	1/2"	5.00	3.00	0.88	0.69	4 - 0.63	3.88	3.5
RC-150/1.5X.75		3/4"	5.00	3.00	1.09	0.69	4 - 0.63	3.88	3.5
RC-150/1.5X1		1"	5.00	3.00	1.36	0.69	4 - 0.63	3.88	3.5
RC-150/2X.5	2"	1/2"	6.00	3.63	0.88	0.75	4 - 0.75	4.75	4.5
RC-150/2X.75		3/4"	6.00	3.63	1.09	0.75	4 - 0.75	4.75	4.5
RC-150/2X1		1"	6.00	3.63	1.36	0.75	4 - 0.75	4.75	4.5
RC-150/2X1.5		1-1/2"	6.00	3.63	1.95	0.75	4 - 0.75	4.75	4.5
RC-150/2.5X.5	2-1/2"	1/2"	7.00	4.25	0.88	0.88	4 - 0.75	5.50	5.0
RC-150/2.5X.75		3/4"	7.00	4.25	1.09	0.88	4 - 0.75	5.50	5.0
RC-150/2.5X1		1"	7.00	4.25	1.36	0.88	4 - 0.75	5.50	5.0
RC-150/2.5X1.5		1-1/2"	7.00	4.25	1.95	0.88	4 - 0.75	5.50	5.0
RC-150/2.5X2		2"	7.00	4.25	2.44	0.88	4 - 0.75	5.50	5.0
RC-150/3X.5	3"	1/2"	7.50	5.00	0.88	0.94	4 - 0.75	6.00	5.5
RC-150/3X.75		3/4"	7.50	5.00	1.09	0.94	4 - 0.75	6.00	5.5
RC-150/3X1		1"	7.50	5.00	1.36	0.94	4 - 0.75	6.00	5.5
RC-150/3X1.5		1-1/2"	7.50	5.00	1.95	0.94	4 - 0.75	6.00	5.5
RC-150/3X2		2"	7.50	5.00	2.44	0.94	4 - 0.75	6.00	5.5
RC-150/3X2.5		2-1/2"	7.50	5.00	2.94	0.94	4 - 0.75	6.00	5.5
RC-150/4X.5	4"	1/2"	9.00	6.19	0.88	0.94	8 - 0.75	7.50	7.0
RC-150/4X.75		3/4"	9.00	6.19	1.09	0.94	8 - 0.75	7.50	7.0
RC-150/4X1		1"	9.00	6.19	1.36	0.94	8 - 0.75	7.50	7.0
RC-150/4X1.5		1-1/2"	9.00	6.19	1.95	0.94	8 - 0.75	7.50	7.0
RC-150/4X2		2"	9.00	6.19	2.44	0.94	8 - 0.75	7.50	7.0
RC-150/4X2.5		2-1/2"	9.00	6.19	2.94	0.94	8 - 0.75	7.50	7.0
RC-150/4X3		3"	9.00	6.19	3.57	0.94	8 - 0.75	7.50	7.0
RC-150/6X2	6"	2"	11.00	8.50	2.44	1.00	8 - 0.88	9.50	9.0
RC-150/6X3		3"	11.00	8.50	3.57	1.00	8 - 0.88	9.50	9.0
RC-150/6X4		4"	11.00	8.50	4.57	1.00	8 - 0.88	9.50	9.0
RC-150/8X4	8"	4"	13.50	10.63	4.57	1.13	8 - 0.88	11.75	11.0
RC-150/8X6		6"	13.50	10.63	6.72	1.13	8 - 0.88	11.75	11.0
RC-150/10X6	10"	6"	16.00	12.75	6.72	1.19	12 - 1.00	14.25	13.5
RC-150/10X8		8"	16.00	12.75	8.72	1.19	12 - 1.00	14.25	13.5
RC-150/12X8	12"	8"	19.00	15.00	8.72	1.25	12 - 1.00	17.00	16.0
RC-150/12X10		10"	19.00	15.00	10.88	1.25	12 - 1.00	17.00	16.0

1. Complete part number would have a / then material of the insert (ex. **RC-150/2x1/316L** this is a 2"x1" reducing insert flange with a 316L insert and carbon steel flange. * For other notes see the S-150 Series. All of these notes at the footer apply to this series but were omitted for space reasons.

Copyright © 2016 American Insert Flange Co., Inc. All Rights Reserved. • Phone: (302) 777-7464 • Fax: (302) 777-7465
1603 Jessup Street, Suite 6, Wilmington, DE 19802 • Web Site: www.AmericanInsertFlange.com

American Insert Flange

CLASS 300#

Standard Flange Thickness

Single Pipe • Slip-On Conventional (SC)

SERIES# SC-300 (CONVENTIONAL)

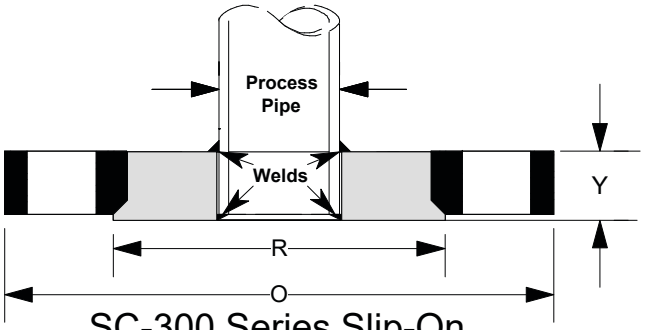

SC-300 Series Slip-On

Part Number *see note 6.	Nominal Pipe Size	O (Outside Diameter)	R (Raised Face)	B (Inside Diameter)	Y (Overall Length)	# of Holes - Diameter	Bolt Circle Dia.	Estimated Weight (in lbs.)
SC-300/.5	**1/2"**	3.75	1.38	0.88	0.56	4-0.63	2.63	1.5
SC-300/.75	**3/4"**	4.63	1.69	1.09	0.63	4-0.75	3.25	2.5
SC-300/1	**1"**	4.88	2.00	1.36	0.69	4-0.75	3.50	2.5
SC-300/1.25	**1-1/4"**	5.25	2.50	1.70	0.75	4-0.75	3.88	3.5
SC-300/1.5	**1-1/2"**	6.13	2.88	1.95	0.81	4-0.88	4.50	4.5
SC-300/2	**2"**	6.50	3.63	2.44	0.88	8-0.75	5.00	6.0
SC-300/2.5	**2-1/2"**	7.50	4.13	2.94	1.00	8-0.88	5.88	9.0
SC-300/3	**3"**	8.25	5.00	3.57	1.13	8-0.88	6.63	12.0
SC-300/3.5	**3-1/2"**	9.00	5.50	4.07	1.19	8-0.88	7.25	16.0
SC-300/4	**4"**	10.00	6.19	4.57	1.25	8-0.88	7.88	19.0
SC-300/5	**5"**	11.00	7.31	5.66	1.38	8-0.88	9.25	24.0
SC-300/6	**6"**	12.50	8.50	6.72	1.44	12-0.88	10.63	30.
SC-300/8	**8"**	15.00	10.63	8.72	1.63	12-1.00	13.00	47.0
SC-300/10	**10"**	17.50	12.75	10.88	1.88	16-1.13	15.25	66.0
SC-300/12	**12"**	20.50	15.00	12.88	2.00	16-1.25	17.75	95.5
SC-300/14	**14"**	23.00	16.25	14.14	2.13	20-1.25	20.25	133.0
SC-300/16	**16"**	25.50	18.50	16.16	2.25	20-1.38	22.50	166.0
SC-300/18	**18"**	28.00	21.00	18.18	2.38	24-1.38	24.75	205.0
SC-300/20	**20"**	30.50	23.00	20.20	2.50	24-1.38	27.00	253.0
SC-300/22	**22"**	33.00	25.25	22.22	2.75	24-1.63	29.25	320.5
SC-300/24	**24"**	36.00	27.25	24.25	2.75	24-1.63	32.00	369.0

1. All dimensions in inches. The **Y dimension includes the 1/16" raised face.**
2. Tolerances are standard to ANSI B 16.5 dimensional tolerances.
3. Bolting is to SA-193 B7 and the gasket is spiral wound.
4. These flanges are made to **standard ASME flange thicknesses**. Although the conventional series (standard flange thicknesses) have been used the longest in the PVF industry, not all pressure temperature ratings will conform with ASME B16.5 due to an insert flange being a two-piece flange. (ASME B16.5 is written for one-piece flanges) Please see our ASME Series for engineered thicknesses that meet and conform to all pressure temperature ratings for ASME Code.
5. Sizes not shown are available upon request.
6. Complete part number would have a / then material of the insert (ex. **SC-300/2/316L** this would be a 2" insert flange with a 316L insert and carbon steel flange. If the flange is 316L, the part # is SC-300/2/316L-316L etc.
7. These dimensions are based on using stainless steel for the insert and carbon steel for the flange. Any changes in these types of material may result in an increase to the dimension of the flange thickness.
8. An insert and flange is sold together as one unit.

Copyright © 2016 American Insert Flange Co., Inc. All Rights Reserved. • Phone: (302) 777-7464 • Fax: (302) 777-7465
1603 Jessup Street, Suite 6, Wilmington, DE 19802 • Email: sales@AmericanInsertFlange.com
Web Site: www.AmericanInsertFlange.com

American Insert Flange

CLASS 300#

Standard Flange Thickness

Single Pipe • Grooved Conventional (GC)

SERIES# GC-300 (CONVENTIONAL)

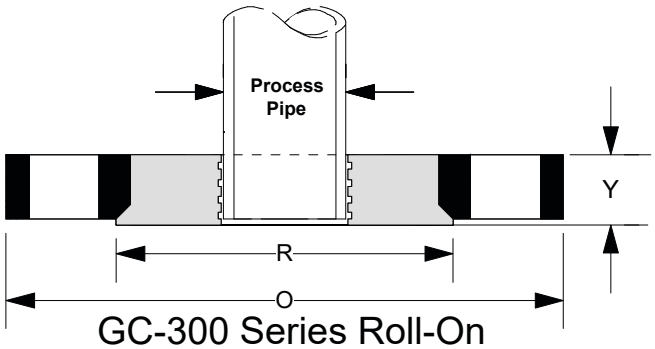

GC-300 Series Roll-On

Part Number *see note 6.	Nominal Pipe Size	O (Outside Diameter)	R (Raised Face)	B (Inside Diameter)	Y (Overall Length)	# of Holes - Diameter	Bolt Circle Dia.	Estimated Weight (in lbs.)
GC-300/.5	**1/2"**	3.75	1.38	0.85	0.56	4-0.63	2.63	1.00
GC-300/.75	**3/4"**	4.63	1.69	1.06	0.63	4-0.75	3.25	1.50
GC-300/1	**1"**	4.88	2.00	1.32	0.69	4-0.75	3.50	4.00
GC-300/1.25	**1-1/4"**	5.25	2.50	1.67	0.75	4-0.75	3.88	6.00
GC-300/1.5	**1-1/2"**	6.13	2.88	1.91	0.81	4-0.88	4.50	7.00
GC-300/2	**2"**	6.50	3.63	2.38	0.88	8-0.75	5.00	13.00
GC-300/2.5	**2-1/2"**	7.50	4.13	2.89	1.00	8-0.88	5.88	14.00
GC-300/3	**3"**	8.25	5.00	3.52	1.13	8-0.88	6.63	16.00
GC-300/3.5	**3-1/2"**	9.00	5.50	4.03	1.19	8-0.88	7.25	19.00
GC-300/4	**4"**	10.00	6.19	4.52	1.25	8-0.88	7.88	22.00
GC-300/5	**5"**	11.00	7.31	5.58	1.38	8-0.88	9.25	33.00
GC-300/6	**6"**	12.50	8.50	6.66	1.44	12-0.88	10.63	47.00
GC-300/8	**8"**	15.00	10.63	8.66	1.63	12-1.00	13.00	68.00
GC-300/10	**10"**	17.50	12.75	10.79	1.88	16-1.13	15.25	95.00
GC-300/12	**12"**	20.50	15.00	12.79	2.00	16-1.25	17.75	122.00
GC-300/14	**14"**	23.00	16.25	14.06	2.13	20-1.25	20.25	271.00
GC-300/16	**16"**	25.50	18.50	16.09	2.25	20-1.38	22.50	375.00
GC-300/18	**18"**	28.00	21.00	18.10	2.38	24-1.38	24.75	450.00
GC-300/20	**20"**	30.50	23.00	20.12	2.50	24-1.38	27.00	565.00
GC-300/22	**22"**	33.00	25.25	22.14	2.75	24-1.63	29.25	752.00
GC-300/24	**24"**	36.00	27.25	24.17	2.75	24-1.63	32.00	945.00

1. All dimensions in inches. The **Y dimension includes the 1/16" raised face.**
2. Tolerances are standard to ANSI B 16.5 dimensional tolerances.
3. Bolting is to SA-193 B7 and the gasket is spiral wound.
4. These flanges are made to **standard ASME flange thicknesses**. Although the conventional series (standard flange thicknesses) have been used the longest in the PVF industry, not all pressure temperature ratings will conform with ASME B16.5 due to an insert flange being a two-piece flange. (ASME B16.5 is written for one-piece flanges) Please see our ASME Series for engineered thicknesses that meet and conform to all pressure temperature ratings for ASME Code.
5. Sizes not shown are available upon request.
6. Complete part number would have a / then material of the insert (ex. **GC-300/2/316L** this would be a 2" insert flange with a 316L insert and carbon steel flange. If the flange is 316L, the part # is GC-300/2/316L-316L etc.
7. These dimensions are based on using stainless steel for the insert and carbon steel for the flange. Any changes in these types of material may result in an increase to the dimension of the flange thickness.
8. An insert and flange is sold together as one unit.

Copyright © 2016 American Insert Flange Co., Inc. All Rights Reserved. • Phone: (302) 777-7464 • Fax: (302) 777-7465
1603 Jessup Street, Suite 6, Wilmington, DE 19802 • Email: sales@AmericanInsertFlange.com
Web Site: www.AmericanInsertFlange.com

American Insert Flange

CLASS 300#

Standard Flange Thickness

Single • Socket-Weld Conventional (WC)

SERIES# WC-300 (CONVENTIONAL)

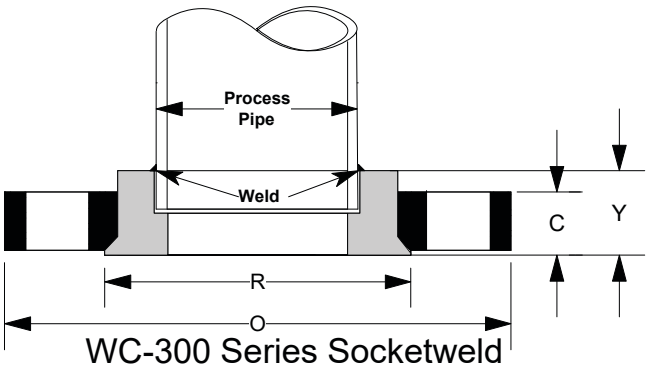

WC-300 Series Socketweld

Part Number *see note 6.	Nominal Pipe Size	O (Outside Diameter)	R (Raised Face)	B (Inside Diameter)	C Flange Thickness	Y (Overall Length)	# of Holes - Diameter	Bolt Circle Dia.	Estimated Weight (in lbs.)
WC-300/.5	**1/2"**	3.75	1.38	0.88	0.56	0.88	4-0.63	2.63	1.00
WC-300/.75	**3/4"**	4.63	1.69	1.09	0.63	1.00	4-0.75	3.25	1.50
WC-300/1	**1"**	4.88	2.00	1.36	0.69	1.06	4-0.75	3.50	4.00
WC-300/1.25	**1-1/4"**	5.25	2.50	1.70	0.75	1.06	4-0.75	3.88	6.00
WC-300/1.5	**1-1/2"**	6.13	2.88	1.95	0.81	1.19	4-0.88	4.50	7.00
WC-300/2	**2"**	6.50	3.63	2.44	0.88	1.31	8-0.75	5.00	13.00
WC-300/2.5	**2-1/2"**	7.50	4.13	2.94	1.00	1.50	8-0.88	5.88	14.00
WC-300/3	**3"**	8.25	5.00	3.57	1.13	1.69	8-0.88	6.63	16.00

Socket Weld insert flanges are generally only stocked up to 3" in the 300# Class, but custom larger sizes are available per special request. Please specify the pipe schedule you will be using with this flange.

1. All dimensions in inches. **The C and Y dimensions include the 1/16" raised face.**
2. Tolerances are standard to ANSI B 16.5 dimensional tolerances.
3. Bolting is to SA-193 B7 and the gasket is spiral wound.
4. These flanges are made to **standard ASME flange thicknesses**. Although the conventional series (standard flange thicknesses) have been used the longest in the PVF industry, not all pressure temperature ratings will conform with ASME B16.5 due to an insert flange being a two-piece flange. (ASME B16.5 is written for one-piece flanges) Please see our ASME Series for engineered thicknesses that meet and conform to all pressure temperature ratings for ASME Code.
5. Sizes not shown are available upon request.
6. Complete part number would have a / then material of the insert, plus an added letter to denote the pipe schedule (sch. 40=G; sch 10=C; more schedules available upon request.) (ex. **WC-300/2/316L-G** this would be a 2" socket-weld insert flange with a 316L insert and carbon steel flange for schedule 40 pipe.
7. These dimensions are based on using stainless steel for the insert and carbon steel for the flange. Any changes in these types of material may result in an increase to the dimension of the flange thickness.
8. An insert and flange is sold together as one unit.

Copyright © 2016 American Insert Flange Co., Inc. All Rights Reserved. • Phone: (302) 777-7464 • Fax: (302) 777-7465
1603 Jessup Street, Suite 6, Wilmington, DE 19802 • Email: sales@AmericanInsertFlange.com
Web Site: www.AmericanInsertFlange.com